LF-II

Load Cell

Miniature Compression Load Cell

Ideally suited for Mini weighbridge & Tank, hopper weighing
Protection Class Ip68
Tool Steel Construction
Capacity 2t, 2t, 10 & 20t

Mode of Connection

Input+: Red
Input-: White
Output+: Green
Output-: Black

Input Impedance: 380 ±2Ω
Output Impedance: 350 ±5Ω

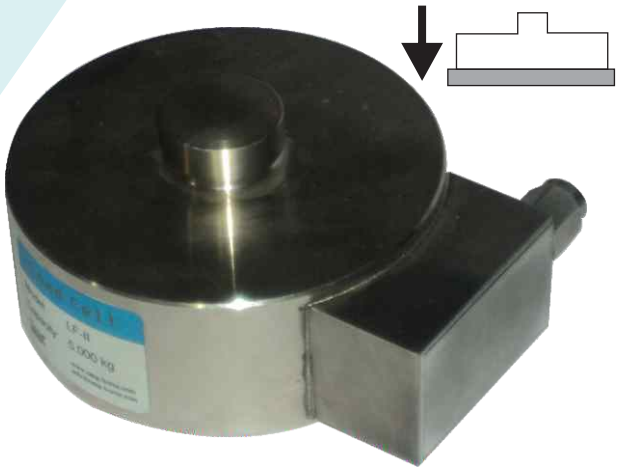

Capacity (t)	A	B	C	H	G	J	R	T	X	Y
2 t	90	48	25	4XM10	70	12	100	12.5	30	50
5 t	90	48	25	4XM10	70	12	100	12.5	30	50
10 t	115	60	32	4XM12	90	16	160	12.5	30	50
20 t	115	60	32	4XM12	90	16	160	12.5	30	50

Dimensions

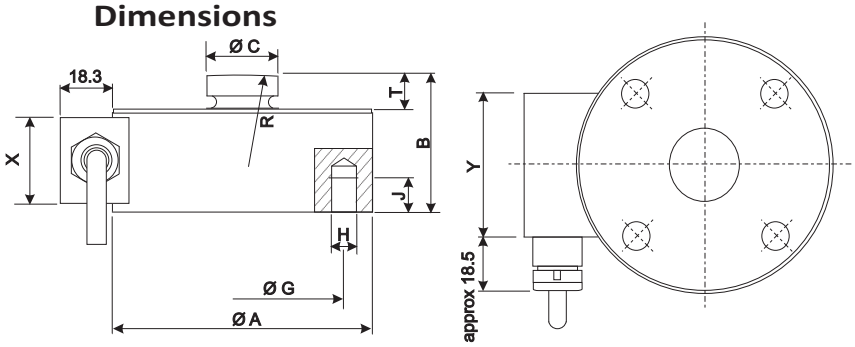

Specifications:

Rated Output (mv/v)	2.0 ± 0.2
Creep	0.02 %FS/30min
Total Error	0.02 % F.S
Recommended Excitation	15v (AC or DC)
Non-repeatability	0.01% F.S
Zero Balance	1 % F.S
Insulation Impedance	5000 MΩ
Operating Temp Range	-30 +70 °C
Compensated Temp Range	- 20 °C ~ +60 °C
Temp Effect on Load	0.02 % F.S
Temp Effect on Zero	0.02 % F.S

Reliable and Rugged! CE

sang
Weighing Solution
www.sang-weighing.com
info@sang-weighing.com